ultraframe

Window & Door Products

Orangery Products

Home Extension Products

Conservatory Products

Skylight Products

Livinroom

System Overview and Design Guide

INTRODUCTION AND OVERVIEW

The conservatory that thinks it's an extension. Welcome to the Livinroom

The Liv*in* room uses the well proven Ultraframe Classic Glazed Roof at its heart and then adds an engineered framing system internally which is plastered to give a perimeter ceiling all the way round.

This creates something that is neither conservatory nor extension. It combines all the benefits of the former in terms of light and then fuses this with the solidity and feel of an extension. This effect can be played up or down depending on whether glazed walls or masonry walls are specified.

All of this can be achieved at a price point not dissimilar to that of a standard conservatory.

CONTENTS

Introduction *page* 2

System Overview *page* 3

Standard Details *pages* 4-7

Typical Cross Sections *pages* 8-11

Every day shapes *page* 12

Case Study *page* 13

Order Form *page* 14

Installation - Quick Overview *page* 15

Externally, this design features Cornice.

Product definition

An engineered steelwork ladder system that forms a framework relying only on the roof for support onto which plasterboard is screw fixed.

Consumer Benefits

- Enjoy the light from a conservatory with the feel of an extension - providing greater overall value and the best of all worlds.
- Creates a whole new dynamic to the space - a 'real room/living room' feel.
- You can maintain light and space by using windows all round OR have brick piers to give a greater sense of solidity.
- A holistic 10 year guarantee is issued to your chosen retailer.
- Better thermal efficiency when compared to a standard conservatory.
- This real room/living room feel means more styling and furnishing options and the perimeter ceiling is perfect for down lighters.

Trade Benefits

- As are all Ultraframe's products, Liv*in* Room was extensively tested in the R&D facilities at Head Office.
- This is a systemised approach, yet maintains flexibility for the retailer
- Steel work ladder framework and roof are integrated as the additional weight is accounted for in Ultraframe's U-Design software which up-specs roof according to postcode and loadings.
- Allows completion of the complete glazed roof externally and internally before steelwork ladder system is installed.
- Steelwork ladder framework system is supplied on the same lead time as the roof.

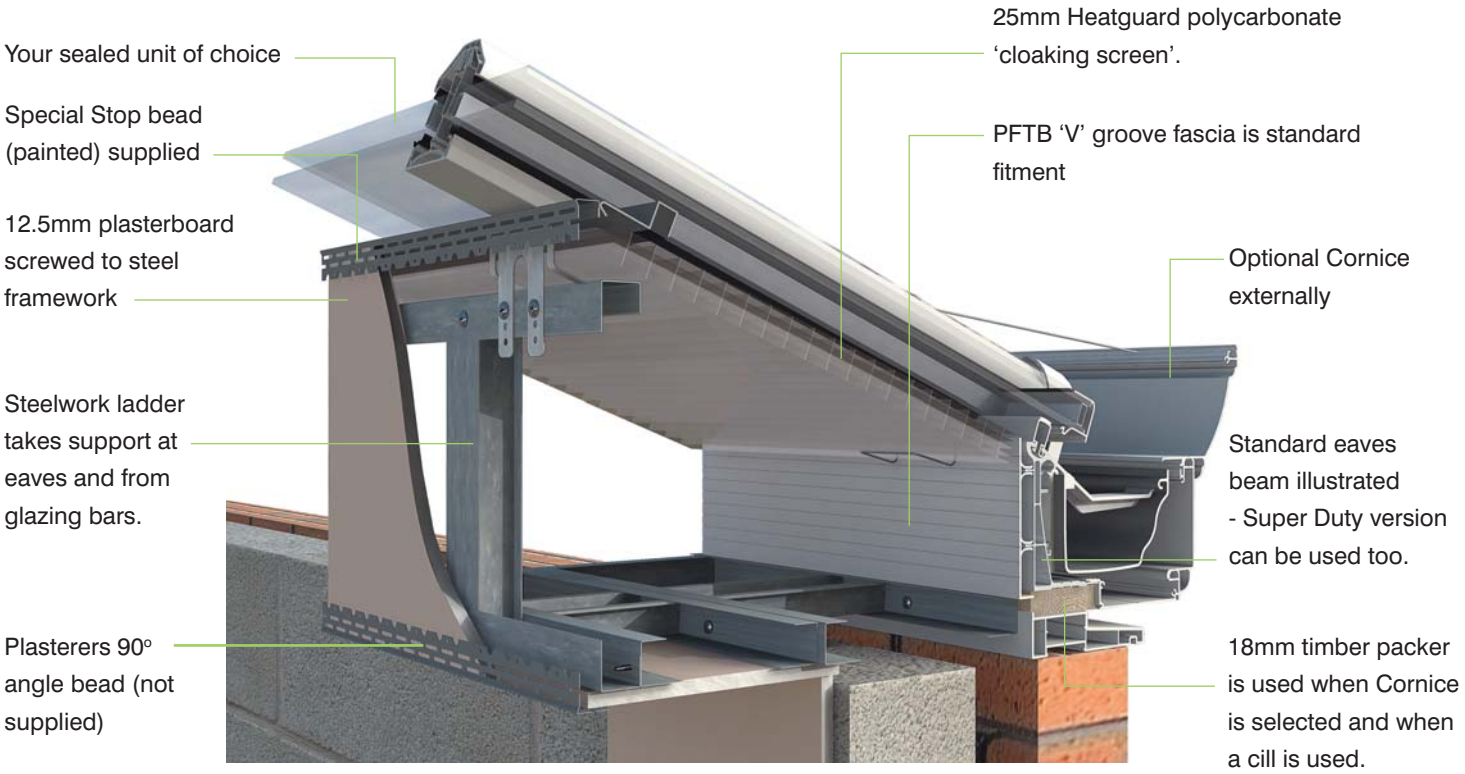

Key Performance Criteria

- Can be used from 15 - 40 degrees
- Steelwork ladder system extends from 300mm to 1200mm
- Datum point is internal side frame to external face of 12.5mm plasterboard.
- The system is not designed to carry additional suspended weight - e.g. - flatscreen tv's
- Can be used with standard eaves or Super Duty version with box gutters & bolsters and accommodates differential pitches across hips.
- If your chosen design features a box gutter, we strongly suggest you use a 30mm framepacker, which allows the plasterboard to run underneath the boxgutter for a neater finish.

PRODUCT OVERVIEW

Transom Bar

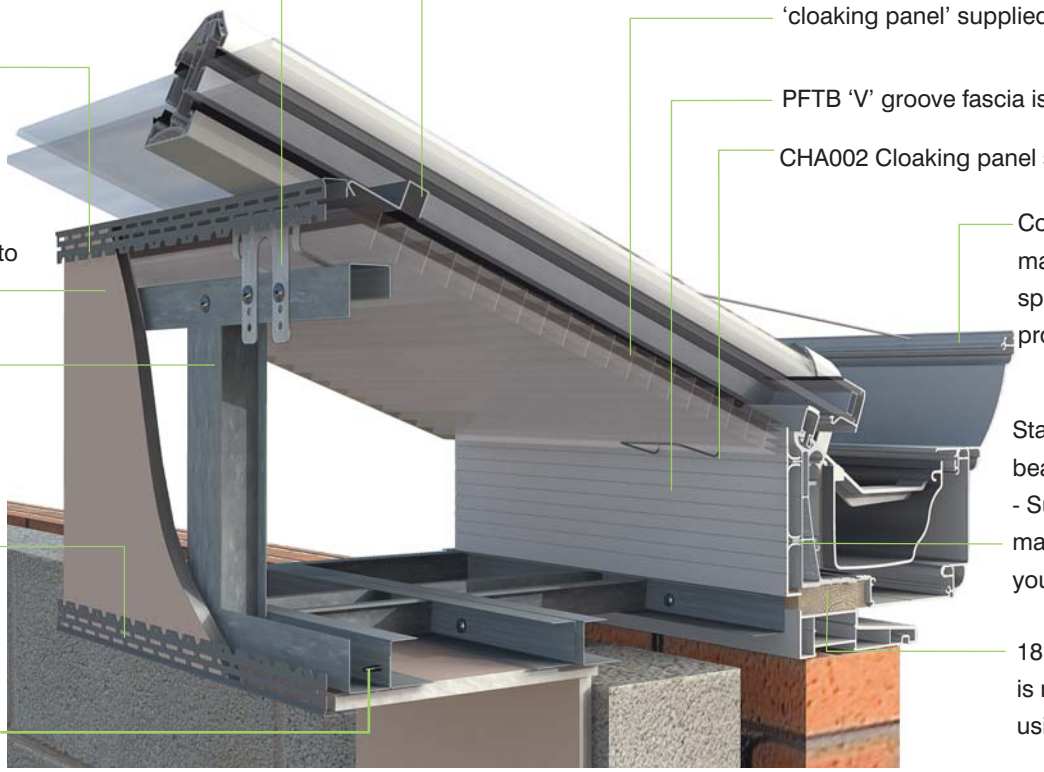

Georgian Bolster Bar

PRODUCT OVERVIEW

Box Gutter - with frame add on

Framework terminates on host wall.

Box Gutter - without frame add on (retro fit situation)

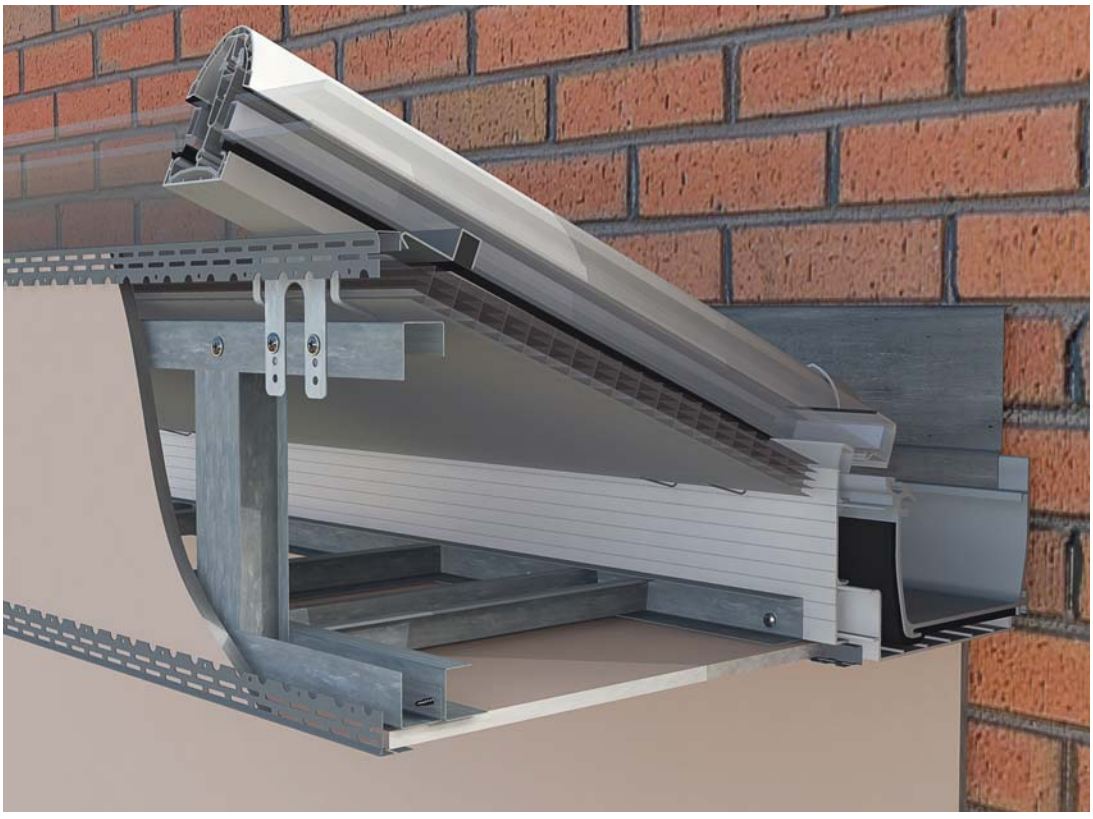

Framework terminates on fascia

PRODUCT OVERVIEW

Gable Frame Situation

If this is a new installation of Liv*in* Room then the design of the gable frame should cover the 'open end' of the ladder framework. On retro fits where a redesign of the gable feature is not feasible, the application of a privacy film to the glass may suffice.

GALLOWS BRACKET PRE - PREPARATION

On an installation of roof and Liv*in* Room you MUST have this situation when you arrive on site. Structurally, it is not permissible to insert this packer / spacer when the roof is already glazed

Packer / Spacer slips over

Finished installation - 165mm

Box Gutter - 265mm

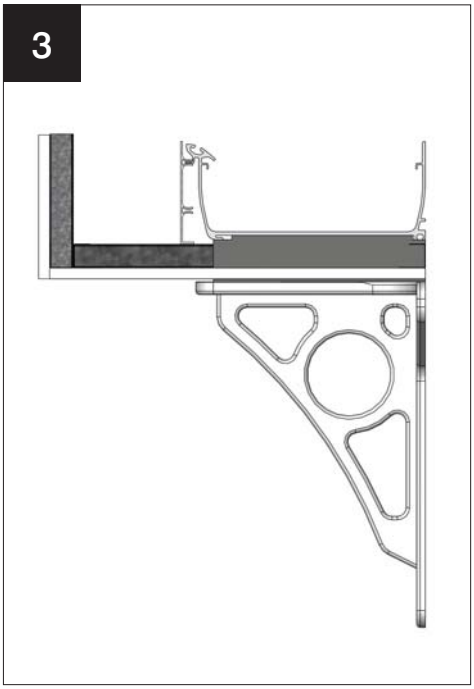

Lighting Layouts

Into the 12.5mm plasterboard, can be inset down lighters.

The ladder steelwork framework provides the perfect vehicle to transport wiring back to the dwelling's wiring circuits.

Optional Cornice externally

Cornice can be used to give additional visual interest.

It can be used with standard eaves beam or with the Super Duty eaves beam.

Corner covers for 135 and 90 degree corners are now featured as standard.

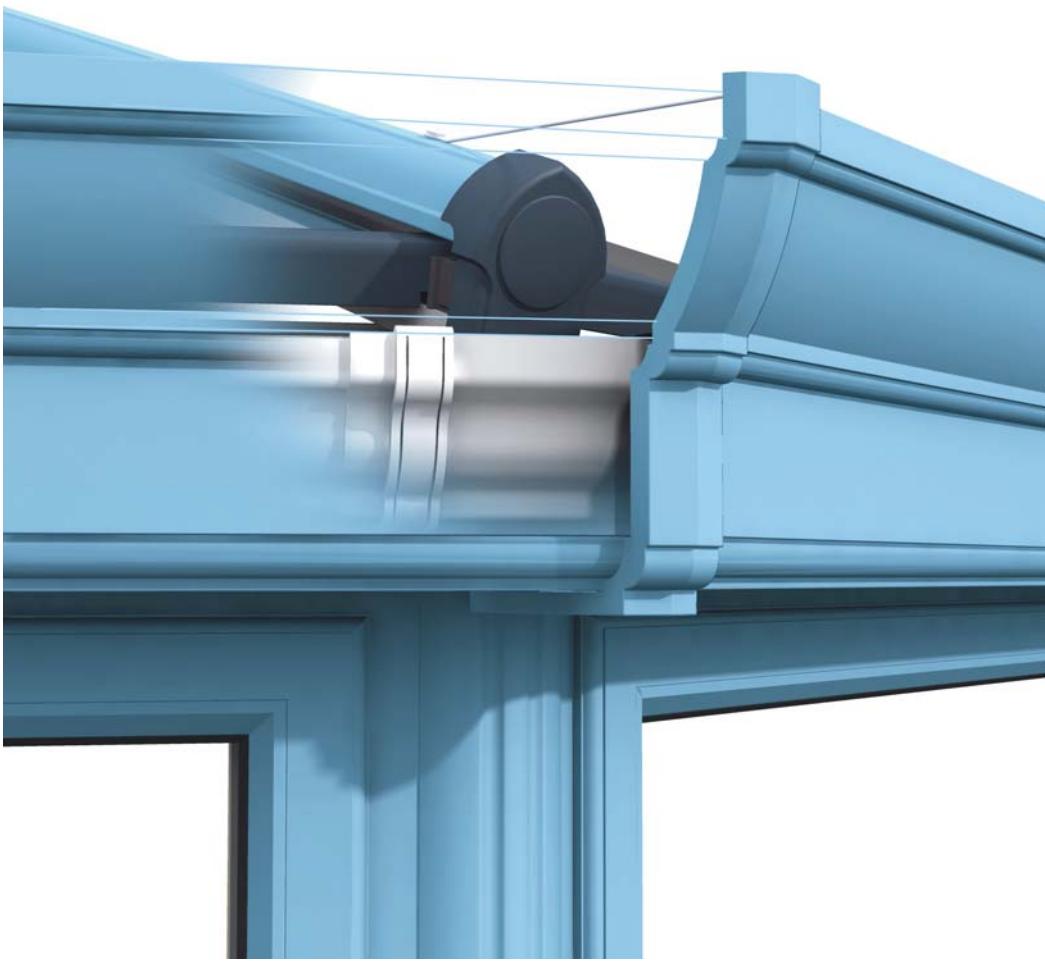

TYPICAL CROSS SECTIONS

1

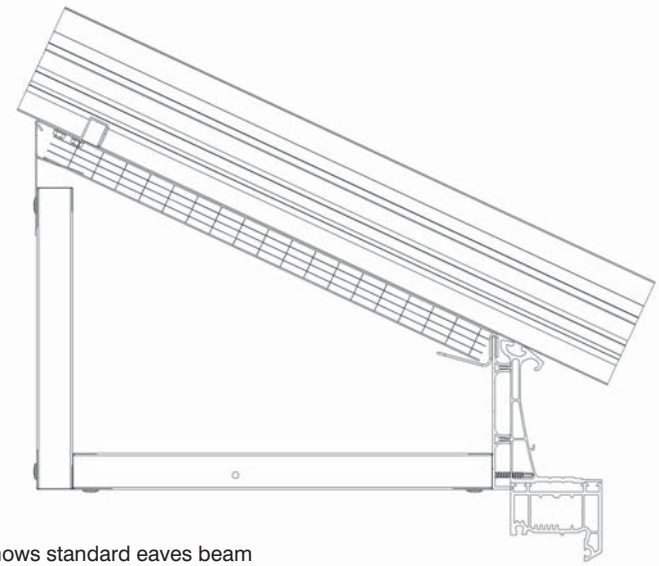

Illustration shows standard eaves beam

Ladder framework terminates on Fascia - standard eaves

Here we have the ladder steelwork terminating on the PFTB plank fascia (using standard eaves beam).

This detail is used when there are window frames around the complete perimeter and where there are no box gutters included in the design.

This design is also used if the ladder is retro fitted to an existing Ultraframe roof.

2

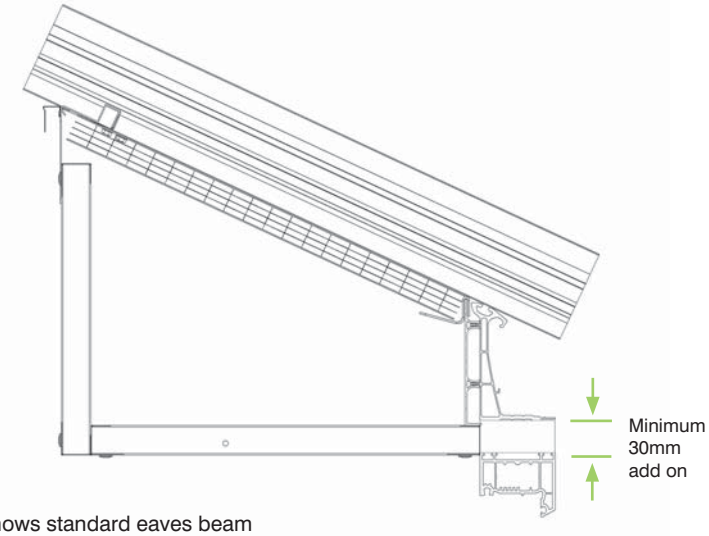

Illustration shows standard eaves beam

Ladder framework terminates below Fascia - standard eaves

This detail is used when there is a box gutter included in the design. The steelwork ladder terminates underneath the PFTB plank fascia.

Please note the following;

- window frames all round, a frame add-on of at least 30mm must be used.

3

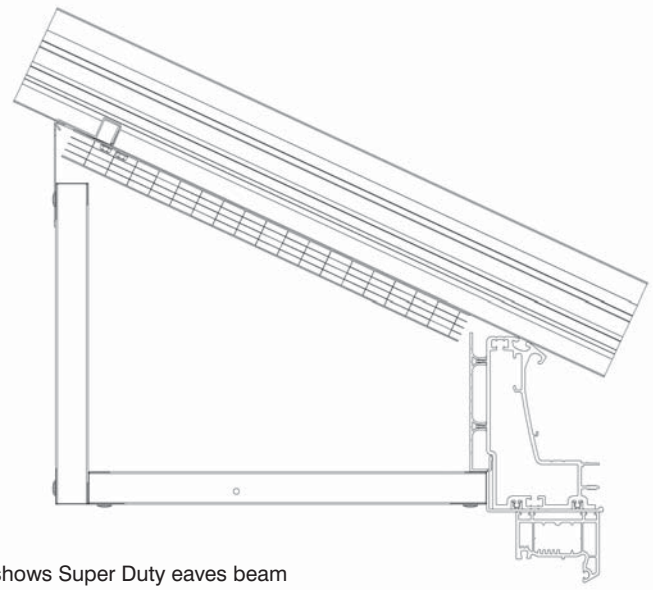

Illustration shows Super Duty eaves beam

Ladder framework terminates below fascia - Super Duty eaves

Here we see the roof sat onto window frames featuring the Super Duty eaves beam which is used over large door openings

The ladder steelwork terminates under the PFTB plank fascia.

TYPICAL CROSS SECTIONS

4

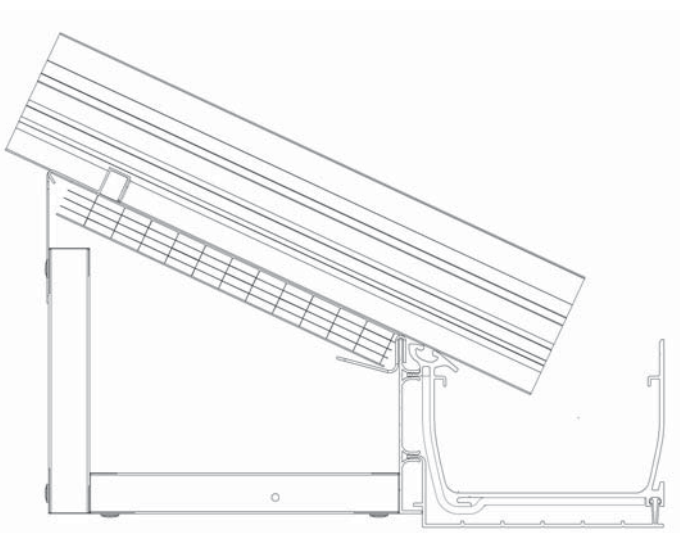

165mm box gutter illustrated - applies to 265mm version also

Box gutter - terminates on fascia

This detail is created when the ladder steelwork framework is retrospectively fitted to an already built conservatory.

Horizontal ladder framework terminates onto the box gutter cladding.

5

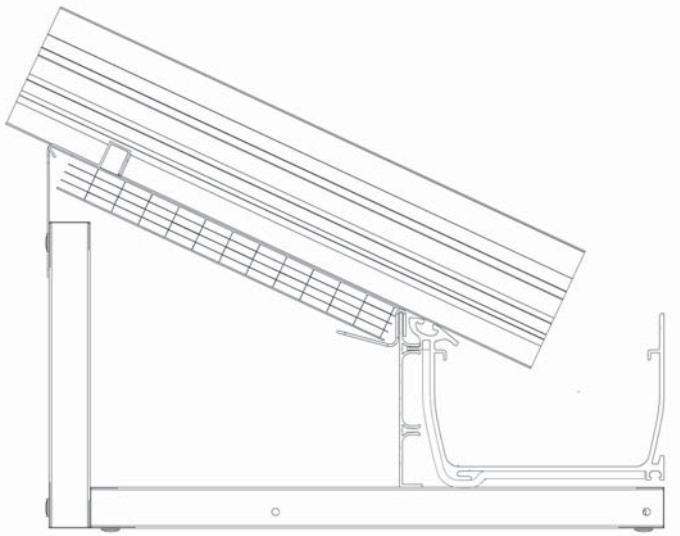

165mm box gutter illustrated - applies to 265mm version also

Box gutter - terminates below fascia

When starting a new installation that features a box gutter, this is the way the ladder framework is finished at the box gutter.

To ensure this detail is executed accurately, it is necessary to undertake the following;

- window frames all round, a frame add-on of at least 30mm must be used.

6

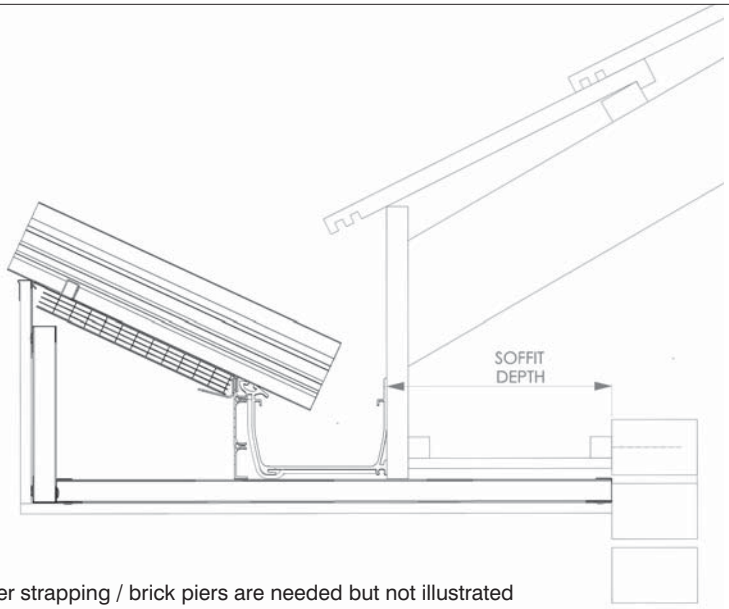

Box gutter strapping / brick piers are needed but not illustrated

Box gutter - terminates onto bungalow fascia

To achieve this detail a 30mm add on is required and this allows the horizontal ladder to sail through to the host wall.

Please supply soffit depth when ordering

TYPICAL CROSS SECTIONS

7

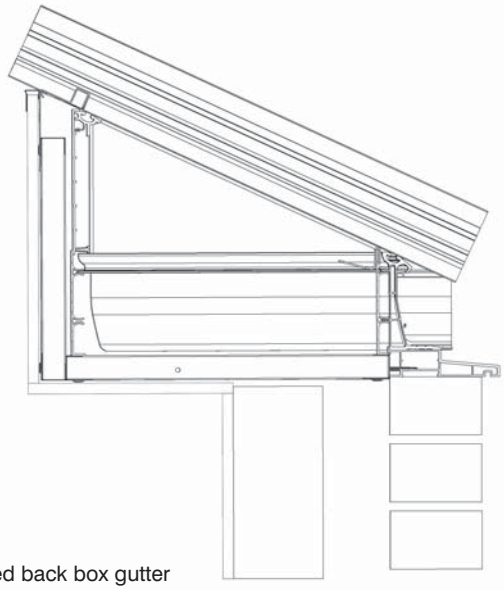

Illustration shows raised back box gutter

Box gutter - raised back

When the conservatory design features a raised back box gutter, this is the detail.

Please note the rule about 30mm add-on/cill applies

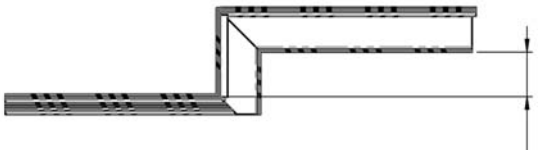

Plan View: Raised back box gutter

8

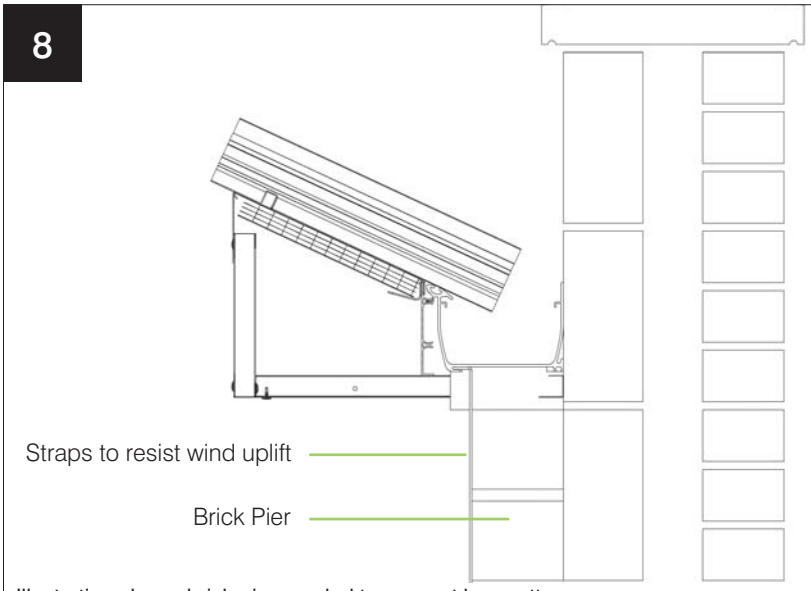

Illustration shows brick pier needed to support box gutter

Box gutter - masonry parapet wall

In this situation, a brick pier internally is necessary to support the box gutter. Straps are necessary to resist wind uplift.

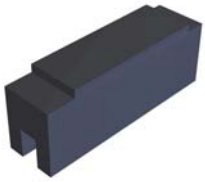

CHA165 or CHA265
Box gutter support packer
165 or 265

2x required on each pier

9

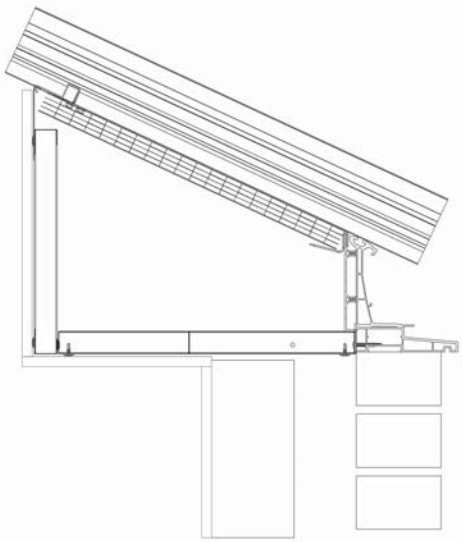

Illustration shows standard eaves beam

Standard eaves on cill

A minimum 30mm cill is needed to create this detail.

Horizontal ladder terminates below fascia. Internal block work MUST allow horizontal framework to fly through without interference

TYPICAL CROSS SECTIONS

10

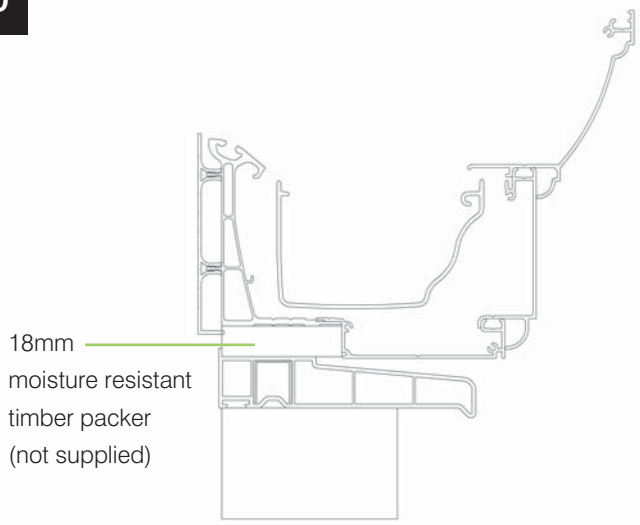

Illustration shows standard eaves beam

Standard eaves beam on cill with Cornice

When Cornice is used with a cill an 18mm timber packer is inserted

11

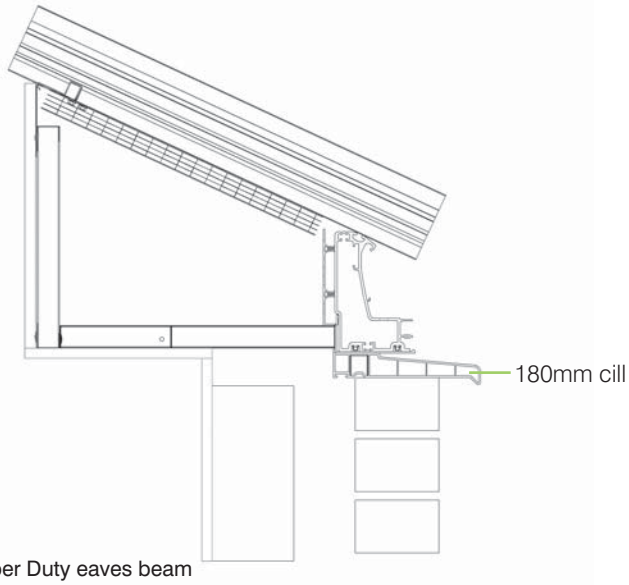

Illustration shows Super Duty eaves beam

Super Duty eaves on cill

When building the roof onto masonry, recommended good practice detail is to use a cill.

As the Super Duty eaves beam sits 'inboard' a further 25mm, we suggest using a 180mm cill.

As drawn, the ladder steelwork terminates below the PFTB plank fascia.

12

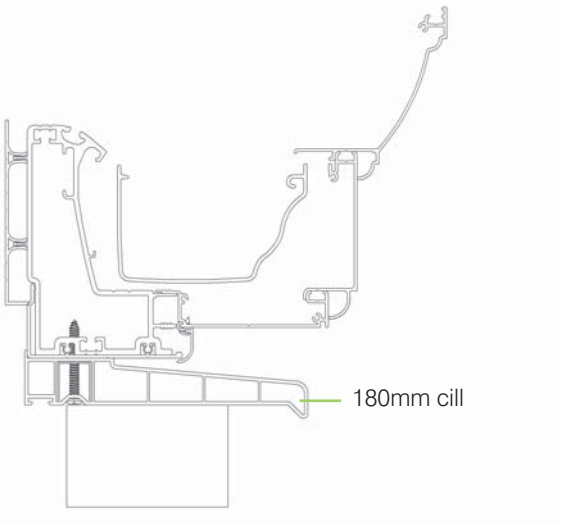

Illustration shows Super Duty eaves beam

Super Duty eaves beam on a 180mm cill with Cornice

In this situation, we recommend a slightly deeper cill than on standard eaves beam.

Victorian Options

EQUAL BAY

DOUBLE ENDED

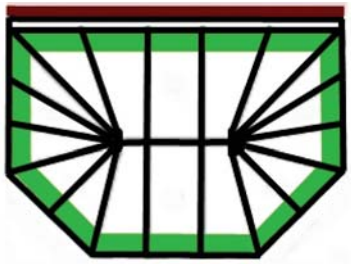

STRETCHED FRONT

VICTORIAN / GEORGIAN

Lean-to Options

STANDARD

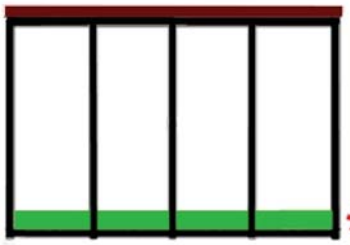

HIPPED

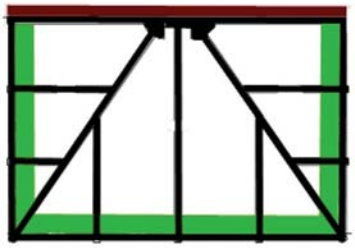

HIPPED HYBRID

WRAP-A-ROUNDS

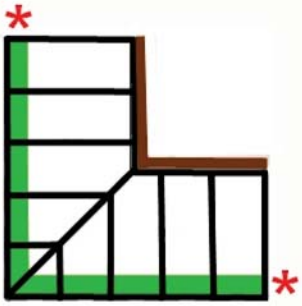

Georgian Options

STANDARD

DOUBLE ENDED

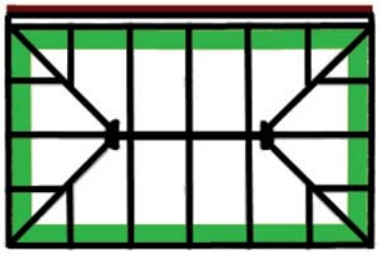

HYBRID

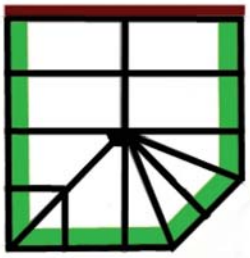

Gable Options

STANDARD

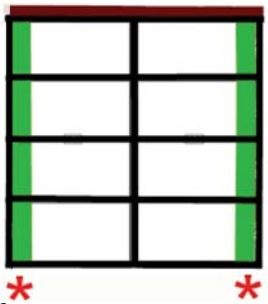

DOUBLE ENDED

Denotes the area covered by the orangery sections.

Please note that the Orangery section widths will vary dependant on roof pitch.

* Cloaking requirements for gables.

This needs to be considered as part of the design and is the responsibility of the retailer to supply and install the materials required to clad off the 'open' end.

Shapes not identified above that feature a valley may incur an additional manufacturing charge.

CASE STUDY

When selling a Liv*in* Room, it is important to understand that where the design features different pitches - as illustrated - the projection of the ladder framework is varied between elevations. (The height of Liv*in* Room is constant across elevations). Images lifted from U-Design software.

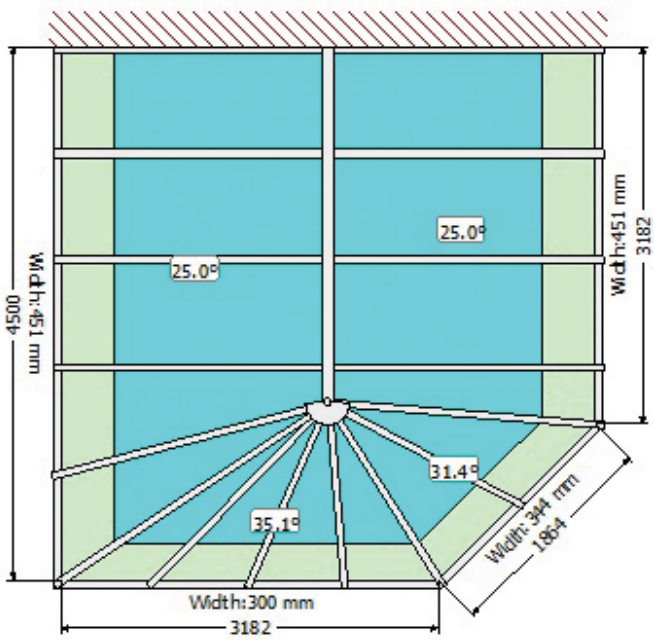

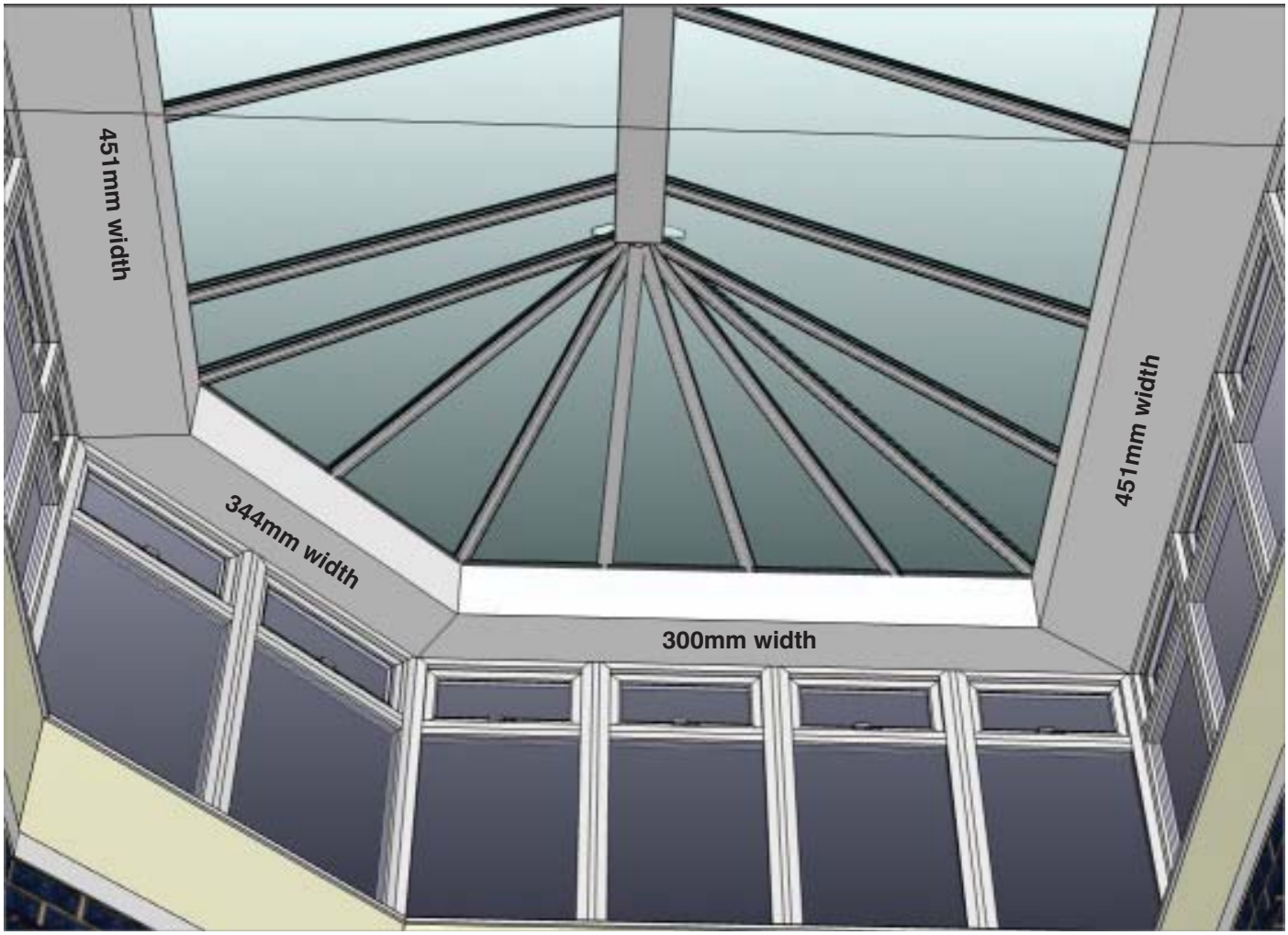

ultraframe

Transforming light and space

It is Ultraframe's policy to continually seek to improve its products, processes and services, and we reserve the right to change specifications without prior notice. Ultraframe is a trading name of Ultraframe (UK) Limited

CHA001 v1 IW 1000 10/11

www.ultraframe.co.uk

Ultraframe (UK) Ltd, Salthill Road, Clitheroe, Lancashire. BB7 1PE